ADB

DITP
Department of International Trade Promotion
Ministry of Commerce, Royal Thai Government

UNITED NATIONS ESCAP
Economic and Social Commission for Asia and the Pacific

APTFF Capacity Building Workshop on Implementing Trade Facilitation Measures: Perishable Goods & Single Window

26 September 2014, BITEC

Bangkok, Thailand

National Single Window

The Malaysia's Perspective

Presented by:

Marainne Wong Mee Wan
The Royal Malaysian Customs Department (RMCD)
26 September 2014

APTFF Capacity Building Workshop :
Implementing Provision of WTO Trade Facilitation Agreement
26 Sept. 2014

OUTLINE:

- Introduction
- Evolution of NSW
- NSW services vis-à-vis WTO TFA
- Challenges and Success Factors
- The Way Forward

Introduction

NSW MAIN DRIVERS

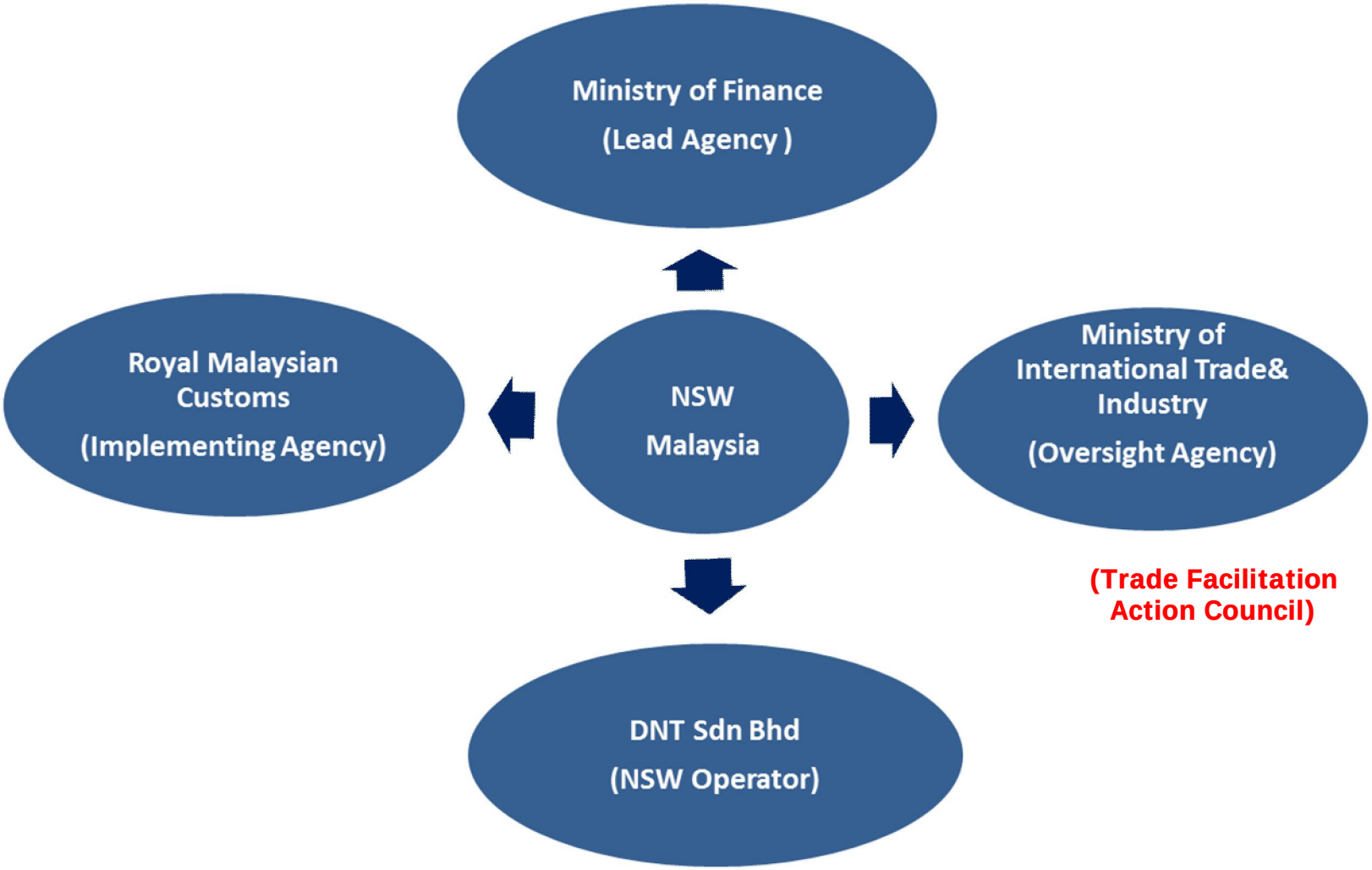

Introduction.....cont.

Objectives of NSW

- To enhance trade efficiency and national competitiveness through simplifying, standardizing & harmonizing trade procedures and Government Delivery System

- To integrate and provide a seamless platform for the ASEAN Single Window for data exchange

Introduction.....cont.

Evolution of NSW

NSW services were enhanced to support commitment of Malaysia at ASEAN level to integrated her NSW with other ASEAN Member States' NSWs via the ASW

NSW was implemented based on existing EDI infrastructure provided by EDI service provider DNT since 1995

CIS-DNT Interface System implemented in 1995 allows electronic data exchange between CIS and its clients through a value-added network

CIS-DNT INTERFACE SYSTEM

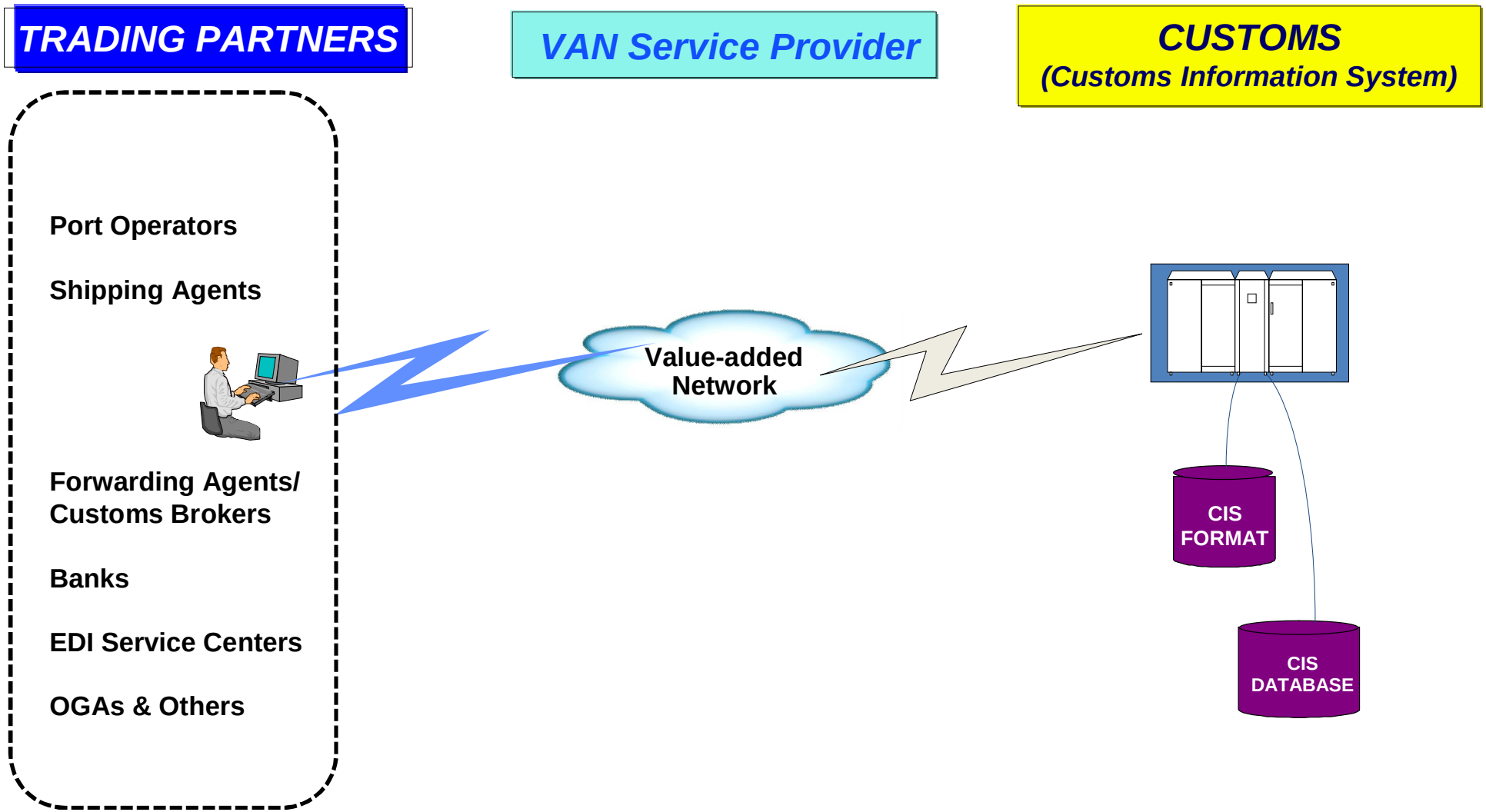

MyTradeLink (Malaysia NSW)

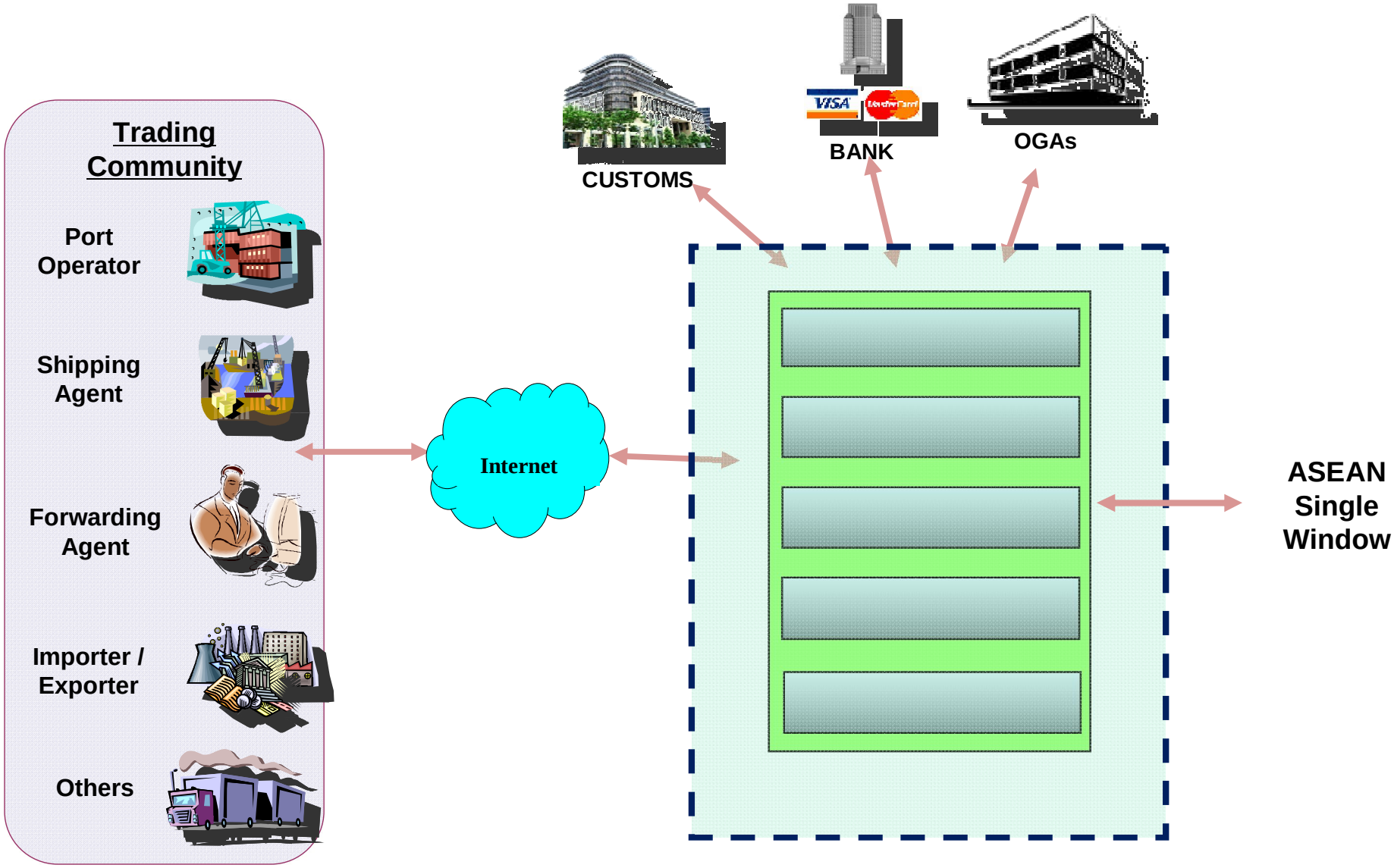

NSW Portal Overview

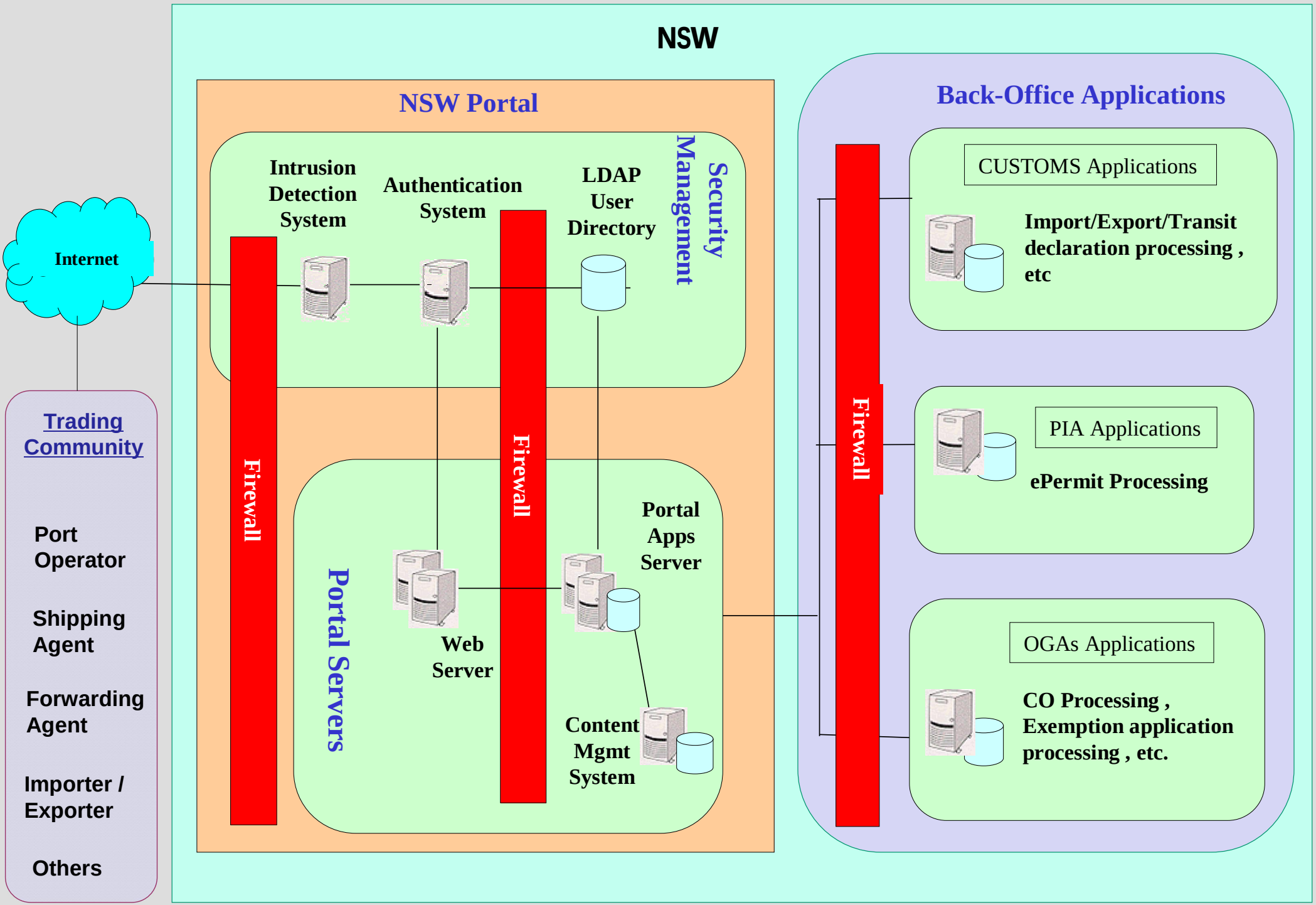

Portal MyTradeLink

Single Sign On

Homepage

www.mytradelink.gov.my

Project Monitoring Committees

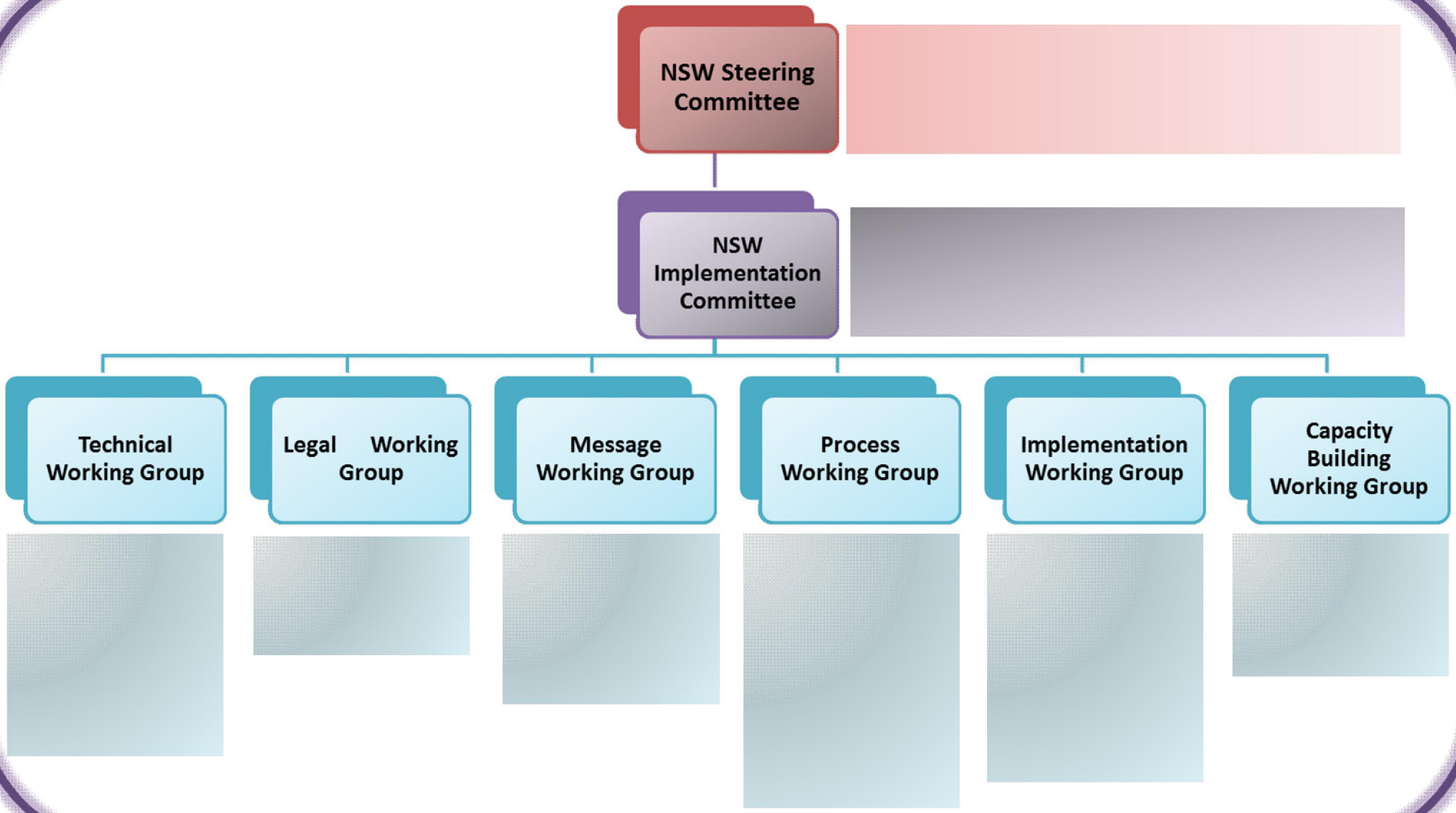

NSW services vis-à-vis WTO TFA

WTO TFA :

-Establish or maintain a single window enabling traders to submit documentation and/or data requirements for importation, exportation or transit of goods through a single window entry point to the participating authorities or agencies. After the examination by the participating authorities or agencies of the documentation and/or data, the results shall be notified to the applicants through the single window in a timely manner.

-In cases where documentation and/or data requirements have already been received through the single window. The same documentation and/or data requirements shall not be requested by participating authorities or agencies except in urgent circumstances and other limited exceptions which are made public.

MY's NSW Services

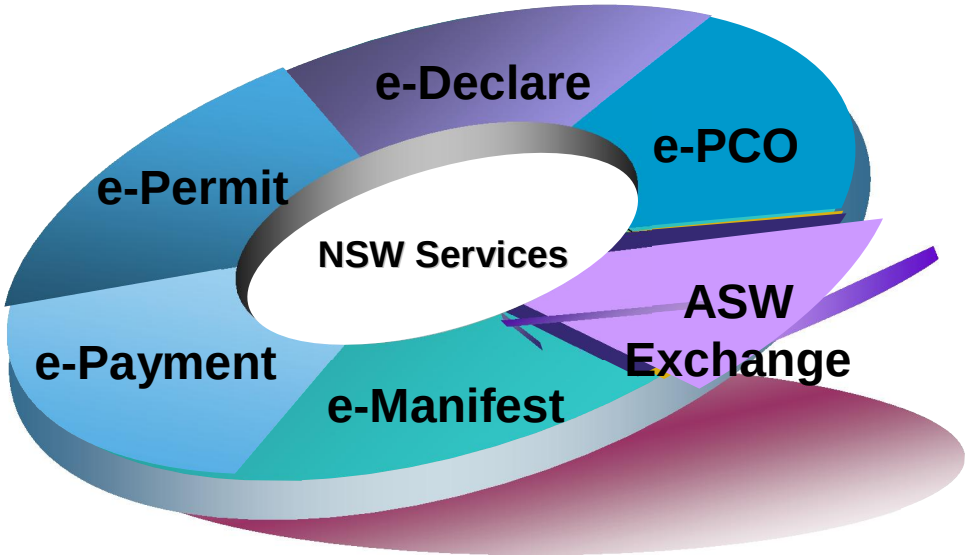

MY's NSW SERVICES

Electronic Customs Declaration

- This system allows the traders / customs brokers submit Customs electronic declarations (Import / Export / Movement)
- It is 24 -7 system
- Upon registration of declaration, CIS would send responses relating physical examination / amount payable / release status etc.

MY's NSW SERVICES.....cont.

Electronic Customs Duty Payment

- It is an online duty payment and enables preparation and submission of duty payment to Customs.
- The system facilitates the submission of Customs Duty payment via 3 modes :

  - Electronic Funds Transfer

    An electronic Customs duty payment via Electronic Multi Payment Gateway (supported by 8 local banks)

MY's NSW SERVICES.....cont.

Electronic Customs Duty Payment

- **DutyNet**

  Online-based Customs duty payment system designed to allow users to make payments via the Internet beyond banking hours

- **FSPG (Financial Service Payment Gateway)**

  A payment gateway to facilitate online payment for Customs duty payment to Customs, permit payment to Permit Issuing Agencies (PIAs), insurance payment (marine cargo insurance) and other trade facilitation and non-trade facilitation products and services

MY's NSW SERVICES.....cont.

Electronic Permit

- This system allows the importers / exporters to apply online for permit from the Permit Issuing Agency (PIA)
- There are 23 permit-issuing agencies that approved permits online

  (ex. Pharmacy, Cocoa Board, etc.)
- The approve permits are also routed online to the applicant and Customs
- 16 Agencies implemented paperless Permit

MY's NSW SERVICES.....cont.

Electronic Preferential Certificates of Origin

- This system allows the exporters to apply online for Certificate of Origin from to the Ministry of International Trade and Industry (MITI)
- Approval is also done online
- A total of 8 schemes are currently being processed electronically (ex. ATIGA Form D, GSP, Textile etc.)

MY's NSW SERVICES.....cont.

Electronic Manifest

- ♦ A community system used by the port users (principal shipping agent, port operator, freight forwarders)
- ♦ This system allows the users to :
  - apply for SCN (ship call no)
  - to submit Vessel information
  - to submit the actual time of arrival of vessel
  - to submit Bill of Lading information
- ♦ This information would be routed to the respective authorities (ex. Customs, Permit Issuing Agencies, etc.)

Challenges and Success Factors

Main challenges

1. Key drivers (Lead agency and other government agencies) may not get the budget timely to put in place requirements to support the implementation of the NSW.
2. Many players involved and it requires efficient coordination.
3. Level of computerization of business processes differs from one organization/agency to another organization/agency and difference in data standard could lead to more complexity.

Success Factors

1. Political will and commitment in terms of national policy and financial support.

2a. Identify a strong Lead agency and ensure that all players have a common understanding on the objectives of the NSW.

2b. Establish relevant bodies (such as steering committee, task force/working groups) to undertake specific roles and responsibilities.

3a. Relevant agencies need to carry out business process re-engineering to streamline their respective business processes.

3b. Identify the champion to coordinate the business process re-engineering activities carried out individual agency including adoption of international standard for data standardization and harmonization.

Challenges and Success Factors.....cont.

Main challenges

4. Coping with changes to existing system is not an easy task.
5. Lacking ICT infrastructure particularly at remote locations could be an obstacle to the effectiveness of the NSW.

Success Factors

4. Establish efficient and effective change management policy and procedure.
5. Establish a strategic plan to address ICT infrastructure issues, if any.

The Way Forward

1. Development of a new Customs Processing System to support the new blueprint of the enhanced NSW is in progress
2. Finalization of NSW Operating model is underway
3. Continue technical testing with other ASEAN Member States' NSWs in the ASEAN Single Window Pilot Project

Thank You