

FIJI-Internet Exchange Point (IXP)

FijiIX

Purpose of IXP

- The FijiIX is a neutral peering point for ISPs, DTV service provider and Universities in Fiji. Its purpose is to facilitate exchange of Fiji's domestic Internet traffic between the peering members.

- To improve the Internet service experience for users by reducing latencies and more access to Internet contents.

- Facilitate operational cost reduction for peering member by avoiding multiple international hops.

Purpose of IXP

- The need to have an IXP as Internet traffic demand increases rapidly in Fiji.
- To enable provisions for a resilient networks that are accessible and affordable for Internet users.
- Fiji-IX was setup in November 2017.

Peering Members

1. Vodafone Fiji Limited
2. FINTEL
3. Digicel Fiji Limited
4. Telecom Fiji Ltd
5. University of the South Pacific
6. Fiji National University
7. Walesi Limited

IXP-Setup

- Setup by the Fiji-IX Steering Committee who had limited resources using a single switch for private peering.
- Mode of operation – Non to Profit. Operational cost for FijiIX is equally divided amongst all the peering members.
- MOU was developed and signed between the Steering Committee and peering members.

Continue

- Phase 1 – connecting all ISPs in Fiji (Vodafone, Digicel, Telecom Fiji, FINTEL), which forms the Steering Committee for the Fiji-IX with the Telecommunications Authority of Fiji (TAF)

- Phase 2 – connecting University of the South Pacific (USP), Fiji National University (FNU) , and WALESI Ltd which provide IP TV via mobile app.

- Phase 3 – Upgrade Fiji-IX through acquired Public ASN and IP Address from APNIC, backup switch for redundancy, Route Server, setup a IXP website and traffic monitoring.

IXP Location

- The FijiIX is located at the FINTEL Vatuwaqa Communication Centre (VCC). Location was ideal for its proximity to the international gateway submarine cables
- Co-location of all ISPs

Network Layout Diagram

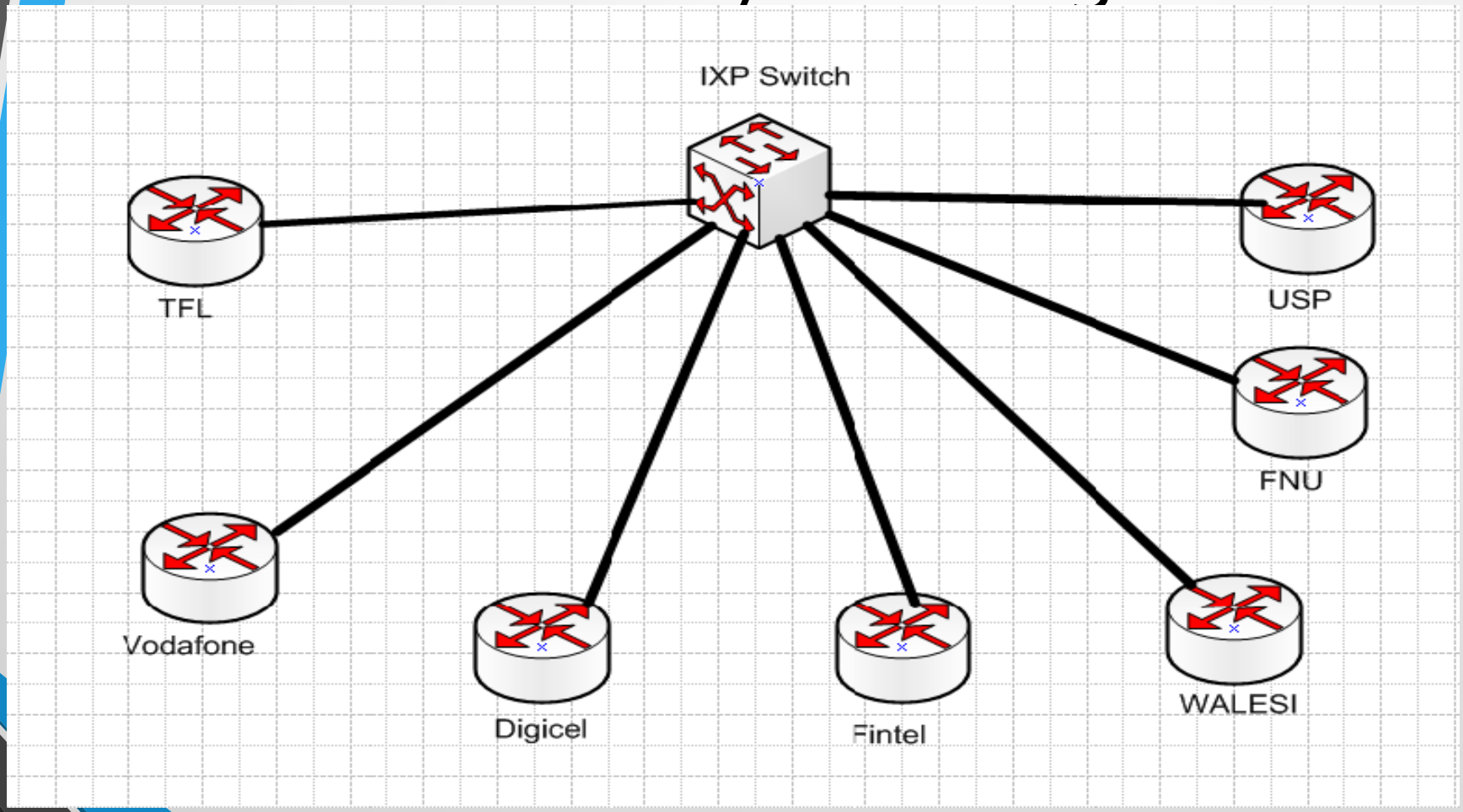

FIJI IXP

Fiji – Internet Exchange Point

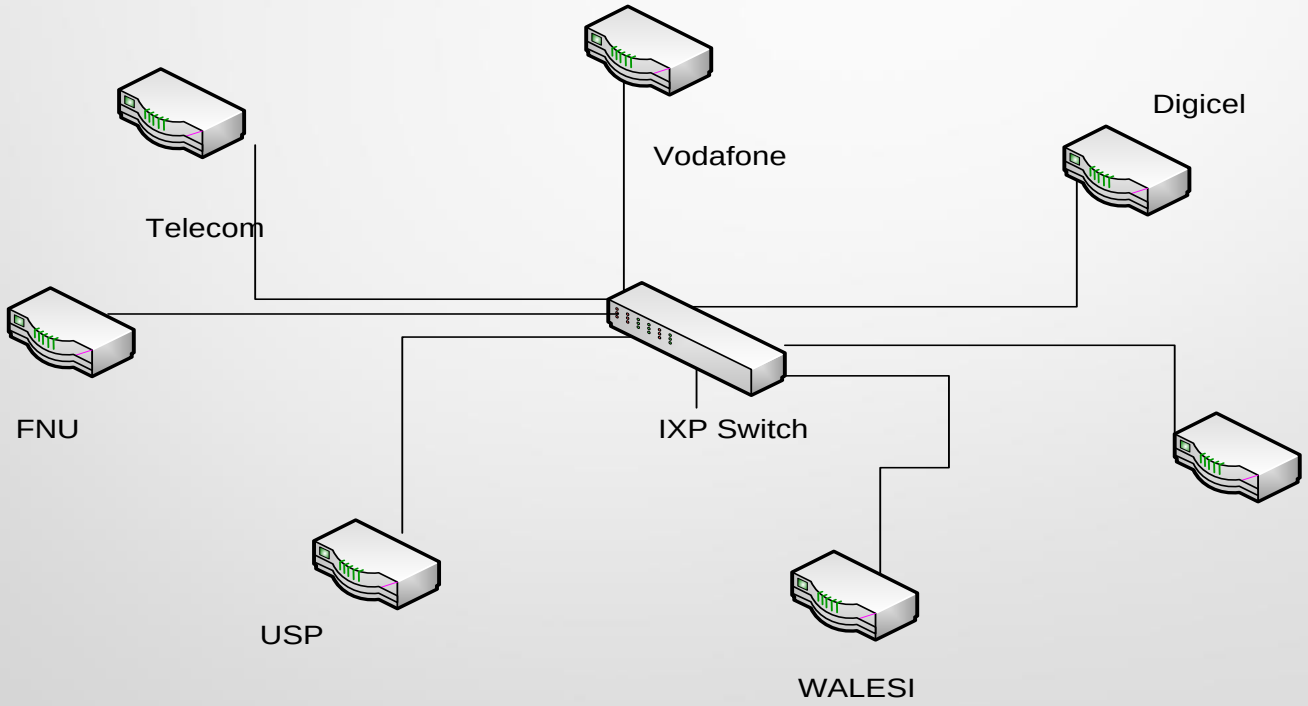

Operators Comments

- The latency to reach other operators was minimum of around 60ms, as the nearest point of exchange between VFL and Digicel, for example, was in Australia (or 120ms+ if the exchange was happening in US). After the Fiji IX deployment, we can reach out to their IPs within 2ms.
  - **Vodafone**

Continue

- The average latency has greatly improved averaging around 20ms from Fintel to the other providers. Before it used to be far more than this so we can say connectivity has improved a lot.
  - **Fintel**

Continue

- We have seen traffic spike up to 100 Mbps over the past month and this is saving us bandwidth and any upgrade costs on our upstream circuit. The IXP allows Digicel to venture into more locally targeted services.
  - **Digicel Fiji**

Continue

- The Fiji IXP has not only improved network performance, it has also improved communication and collaborative efforts between network operators. This collaboration will greatly impact the future enhancement of Fiji's Internet to be more open and secure.
  - **Telecom Fiji Limited**

IXP Benefits

- Operators are routing local traffic through the IX switch which benefits the operators by saving bandwidth on their expensive upstream links.
- For consumers, the domestic connectivity and the quality of service have improved as the route to reach the local contents is shorter.
- Local contents are much faster
- Substantial cost-savings
- With the Fiji-IXP in place Fiji is able to provide free access to education and health websites for all Fijians during the COVID-19 pandemic.
- IXPs have a positive impact on the cost, speed, quality, stability and robustness of the Internet. The benefits of an IXP directly influence the end-user experience

Future

- Working with UNESCAP and ISOC in setting up a Pacific IXP that will connect Fiji, Samoa and New Zealand, a feasibility study has been done by UNESCAP and technically a Pacific IXP will work.
- Pacific IXP will bring ICT economic benefits to Fiji.
- By hosting a node in Fiji for the Pacific IXP will strengthen the position Fiji as the ICT hub for the Pacific

International Support

- APNIC - Asia Pacific Network Information Centre
- ICANN - Internet Corporation for Assigned Names and Numbers
- NSRC - Network Startup Resource Center
- ISOC – Internet Society



Thank you !